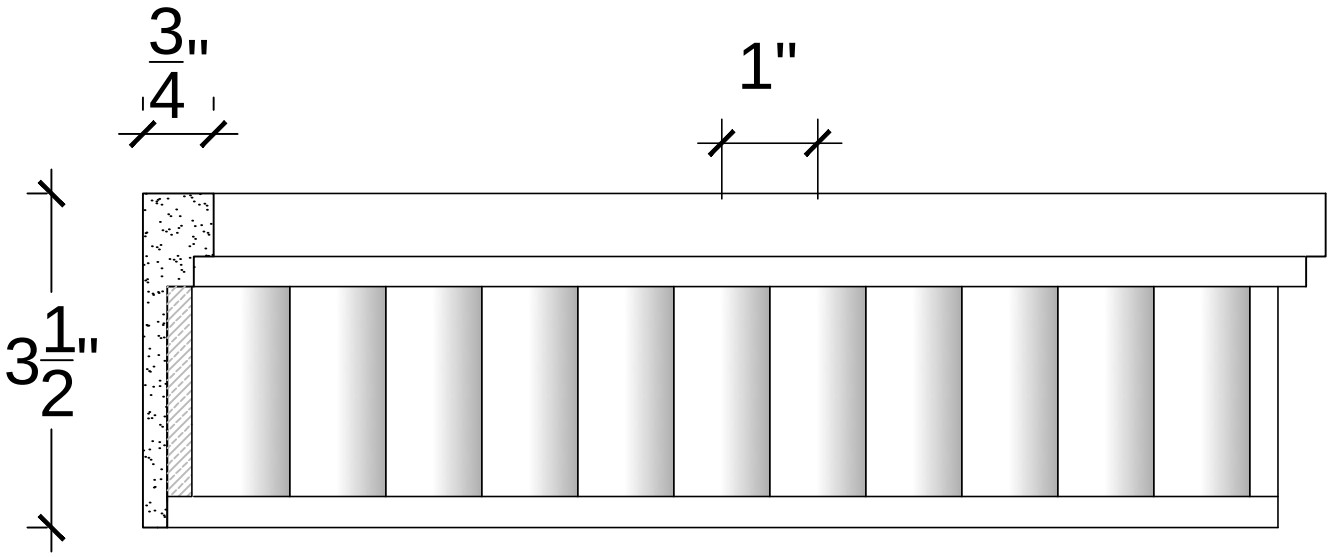

SCALE: 6" = 1'

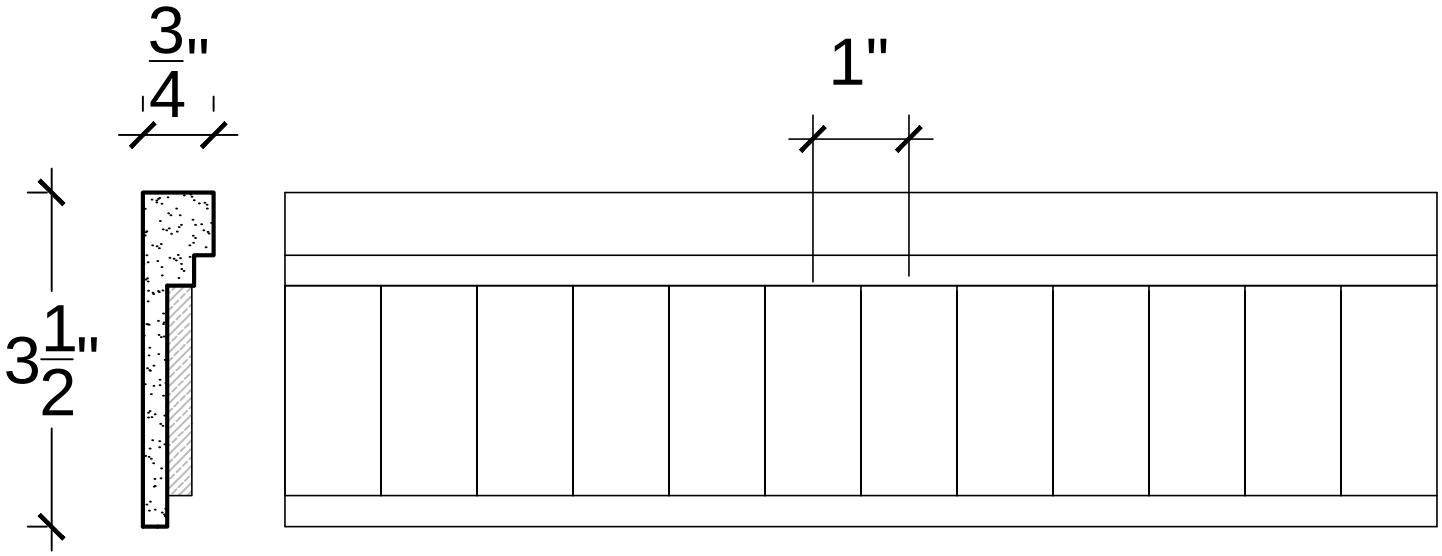

SCALE: 6" = 1'

SCALE: 6" = 1'

DECO CRAFT usa
of fine plaster mouldings

67 Steuben Street
Brooklyn, NY 11205
P 718.534.7000
F 718.534.7040
www.decocraftusa.com

Design Copyright © Deco Craft USA Inc.2010.All rights reserved

NAME: FREIZE	HEIGHT: 3. 1/2"
	PROJECTION: 3/4"
ITEM# DC503-204	FACE: N/A
	REPEAT: 1"
MATERIAL: PLASTER	LENGTH: 72"